DIGITAL JOURNAL

Price $2.00

A DEDICATED DIGITAL PUBLICATION Since 1953

VOLUME 38, NUMBER 9 NOVEMBER 1990

1S0XV SPRATLY ISLAND

Not much vegetation, not many neighbors, no TVI, and no mermaids but for 2 weeks this was home to this outstanding group of Soviet DXers . Story page 8.

IN THIS ISSUE

HITS & MISSES 2
PACKET 3
AMTOR 5
SPRATLY ISLAND 8
TNC to MIC hookups 9
QSL ROUTES 10
PACKET PICTURES 12
SOFTWARE 13
DX NEWS 16
MSO'S 17
CONNECTIONS 20
DX COMINGS 22
CLASSIFIED ADS 23

PACKET PICTURES

Story on page 12

RTTY *JOURNAL*—

Dale S. Sinner, W6IWO
Owner, Publisher, Editor

ALL CORRESPONSENCE:
9085 La Casita Avenue
Fountain Valley, CA 92708

Phone: (714) 847-5058
FAX: (714) 892-2720

STAFF MEMBERS:

Don Royer, WA6PIR — Asst. Editor

Hal Blegen, WA7EGA — Contesting
Cole Ellsworth, W6OXP — Connections
Richard Polivka, N6NKO — Packet
Eddie Schneider, W6/G0AZT — AMTOR
Jay Townsend, WS7I — Software Review
Betsy Townsend, WV7Y — Awards
John Troost, TG9VT — DX News
Dick Uhrmacher, K0VKH — MSO's
Roy Gould, KT1N — Contest Manager, CQ/RTTY JOURNAL Contest

SUBSCRIPTION RATES

USA/CANADA/MEXICO surf.$12.50
1st Class..... $15.00
FOREIGN ...Surface $18.00/Air $24.00

EXCEPTIONS: Estonia, Latvia, Lithuania, USSR, Asia, Australia, New Zealand, Pacific Islands, Africa (other than North Africa), Indian Ocean Islands and Middle East - AIR only: $24.00 (Surface mail not advised). Cash, check or money order, in U.S. funds only and with request - no credit cards accepted.

Publisher assumes no liability or responsibility for errors, omissions or editorial content. Written permission from the Publisher of the RTTY JOURNAL is required prior to and for any reproduction of all or any portion of this magazine. Mailing will be on or about the 20th of the month. Subscriptions and advertisements must be prepaid by cash, check or money order, in U.S. funds only.

POSTMASTER:
The RTTY JOURNAL (USPS 391850) is published monthly, except combined May/June and July/August issues, for $12.50 per year, by RTTY JOURNAL, 9085 La Casita Avenue, Fountain Valley, CA 92708. Second Class postage paid at Santa Ana, CA 92799-9998 and additional mailing offices.

ADDRESS CHANGES:
Please send all address changes to: RTTY JOURNAL, 9085 La Casita Avenue, Fountain Valley, CA 92708.

ISSN 0033-7161

Copyright © 1990 by Dale S. Sinner
All Rights Reserved

HITS & MISSES

Dale Sinner, W6IWO
9085 La Casita Ave.
Fountain Valley, CA 92708

FOLLOWING UP ON TROUBLED TIMES

If you read my plea last month then you are aware of what publishers go through each month trying to get the issue out the door. The need for material in a fast-paced Newsletter such as this, means most of the time there is no back log. A Newsletter is like a Newspaper, in that news is supposed to be current. Therefore as information comes in to the Journal office, it is immediately used in the next issue. Case in point. This month Greg McIntire, KE0UV, submitted an article of Packet Pictures and you will find it on page 12.

I hope mail has picked up for the other staff members. They try really hard each month to meet the deadline and provide interesting material for the readership. I consider myself lucky to have such a fine group of Hams to help me with the Journal. I don't get a chance to thank them to often, but this month, I'm going to brag a little about them all.

Hal Blegen, WA7EGA, is a famous Contester and has been submitting articles on Contesting, and some funny cartoons, since 1987. He is well know, around the world and his wit and humorous articles are enjoyed by all. He has helped the Journal and the ranks of RTTYers to grow and I'm very pleased he is a member of our staff. He has also been instrumental in providing the RTTY community with the ARRL RTTY Roundup Contest.

Cole Ellsworth, W6OXP, is an engineer by trade but has channeled a lot of his wisdom into Amateur radio over the years. Cole joined the Journal staff in January of 1987 and has become a valuable asset to us all. His "Connections" column is the most popular column each month as you, the readers have indicated in the recent "Reader Survey." Cole's series of articles on RS-232 and Com-1,2,3, and 4 are unsurpassed. This information has been in such demand that it is now available in booklet form from the Journal for a small fee of $5.00 (See ad in classified section). Cole has helped numerous Hams with their Digital Problems and has Beta Tested various products. He has also written a program for keyboard control of ICOM radios that is available on the market. Cole's dedication to helping others with their Digital problems has enhanced the popularity of the Journal immensely.

Roy Gould, KT1N, is the RTTY Journal Contest Director responsible for our half of the CQ/RTTY JOURNAL W/W RTTY Contest that takes place each September. Roy was a member of the Journal staff when I took over in 1986. He wrote the DX NEWS Column and covered Contesting. As the Journal was expanded, Roy took the task of directing the annual contest. This is a monumental chore but he has, with the help of friends, developed a software program for handling the contest results. Roy was also instrumental in bringing the co-sponsorship of this contest to both CQ Magazine and the RTTY JOURNAL. I'm proud to say that this contest has become the premier RTTY contest worldwide. Roy is an avid DXer and Contester and comes to us from the ranks of SSB where he was also well known. His contribution and support as a staff member is much appreciated.

Richard Polivka, N6NKO, came to the Journal on the heels of Danny Wilson, N6IHQ, who was writing the Packet Column. Danny's job demanded to much of his time and so he elected to turn his column over to Richard. Richard brings us the Packet side of the Digital modes each month and has been unbiased in his approach. He has written many articles for beginners, but knows the higher technology and can handle it just as well. Richard is very active in Community Service work such as Red Cross, Rose Parade, and lots of hours working Packet emergency service. Got a tough question on Packet, try Richard for an answer.

Eddie Schneider, W6/G0AZT our AMTOR Columnist has taken a subject, that didn't have much popularity when he started writing his column, to where it is today. I'm sure all of us have noticed the great influx of AMTOR activity on the bands over the past two years. At times the AMTOR portion of the bands is more active than RTTY. Eddie is also an avid DXer and Contester. During the recent CQ/RTTY Journal W/W RTTY Contest, he ventured to the Caribbean to operate as DX. Eddie has given the AMTORites a place in our Digital history and I'm really thankful to have him as a member of our Digital team.

Jay Towsend, WS7I, cannot be mentioned without his wife Betsy, WV7Y. Together they have given the Journal a great deal of depth.

Hits & Misses Continued on page 6

PACKET

Richard Polivka, N6NKO
7052 S. Friends Ave. Apt. J
Whittier, CA 90602

COMMENTS

Time to answer the mail. Over a period of time, I have requested, from the readership, suggestions on what they would like covered in this column. To date, I have received, via mail, only three requests to cover some aspect of packet radio. A section of this month's column will cover one of the requests that I received, which is, NET/ROM - what it is, how it works, and how to use it. So, I will devote some space in this month's column to that request, and the balance will be spent continuing the review of the Kantronics 9600 baud station combo I started last month.

What I am trying to say, is that if you want me to cover some particular aspect of packet in this column, please, please TELL ME!

I have, however, received several questions from locals concerning a new TCP/IP software release written by PA0GRI, but could not answer them because of my lack of information of this software. But I did some sniffing around and found the answers for the people who had the questions. This is a very large package and it looks like Rob, PA0GRI, did some heavy work on KA9Q's colossus. I will try it out and see what it is like. Then maybe a review of it in this column will be in order.

Packet Bashing revisited.

Several people have asked me why I am so down on HF packet. I am not down on HF packet. I just think that it is inappropriate for use on HF as it is presently implemented. I personally have had a chance to work packet on HF and VHF. I have also worked AMTOR and RTTY on both VHF and HF. My HF station here consists of a Butternut HF-6V vertical on the roof with radials, an AEA PK-232 data converter, and a ICOM IC-720A, running a maximum of 80 watts. The match on the antenna is less than 1.5 to 1 on all bands and in the digital portions of each band.

To operate any kind of digital mode over an imperfect, dynamically changing media, such as the "ether", requires a robust protocol to compensate for dropouts in the data information that can be caused by selective fading, SID, and other anomalies of the ionosphere. By nature, packet is error-free. It requires that the received transmission be error-free before it is passed onto the computer or terminal. If so much as one bit is corrupted, the whole transmission is wasted. This then causes the last transmission to be repeated until one of two things happen - 1: The transmission is received correctly, or 2: the link retries out and is shut down.

With AMTOR, you are not sending long 5 - 10 second bursts of data, but instead, you are sending short bursts lasting for less than a second (ARQ assumed). If you are using FEC, then the radio is keyed down and each character is sent several times to the receiving station. If the receiver can't decode the character after getting a couple of shots at it, then the rest of the data is passed on and a character to signify a non-received character is inserted so that we know a character has been missed. Now comes the fun part. I have not been able to have an enjoyable QSO with another amateur on HF packet. I find that the process is too slow and there are to many retries over the circuit. However, I can use AMTOR FEC to send a CQ and usually get a response right back in ARQ to my Selcall and the radio starts chirping away. Usually, once I find that we are working fine together, I will REDUCE power to about 25 watts and continue to have the QSO with no problems. Admittedly, there are times where in the course of the QSO, conditions drop to where I could use more power to get through, but usually I don't raise it and leave it where it is set and wait until the link picks up again.

To be honest, I would like to see a HF packet station, using 25 watts into a vertical, have a QSO between West and East coast stations using a packet channel. I can guarantee that I could move more information over an AMTOR link than the packet link in the same period of time. What I am really waiting for is the specification for ARQ9 or a new protocol for Packet that will work better on HF (PACTOR ??).

So, for the people out there who think I am into bashing HF packet, I am not bashing the mode, I am bashing the way it is being used. Work is being done though. At present, discussions are in progress by the designers of AX.25 to fix some of the shortcomings of packet on HF. One such fix would be to use ECC's in the packets so the receiving station can fix a bad packet and pass on reliable information. Now that would be a step in the right direction.

THE REVIEW

Last month, I covered here in this column, how the equipment was received from Kantronics and how it went together. This month, I will cover some of the aspects of the Kantronics modems that fit into the Data Engine.

The DE1200 baud modem is a plug-in card that sits on top of several connectors within the Data Engine box. It is a little less than half the width of the main board and about half as long. The workhorse on the board is a 3105 modem chip. The board has all of the usual amenities like a watchdog timer, AFSK out level control and the input equalization circuitry.

There is also an option that allows you to change the configuration of the PTT function. In the Normal position, the PTT is available on a separate pin for keying radios that have dedicated PTT lines, like mobile radios and base radios. The other option for PTT is the HT option. This allows for keying handheld radios that have the TX audio and the

PTT on one line, like the ICOM handhelds. I have a 1200 baud system set up on my ICOM 02-AT and it works just fine. No complaints on my signal, but then I have the radio set to deviate no more than 4.5 KHz maximum.

The DE1200 modem has the option of three resident DCD schemes with a logic port for an external DCD unit. The first option is the sine-wave carrier detect. This works by detecting the sine wave tones that are used with packet transmission. It is able to only detect packet signals and reject noise and voice. This circuit is about 95% effective at this location. Occasionally, I get a mix that brings in a nearby repeater and the voices cause the DCD to false. However, this does not hamper the operation of the unit on the channel I am using. Also, this option allows you to run your radio unsquelched for faster operation.

The second option works off of the carrier detect of the 3105 modem chip. This one will trigger if there is any energy on the frequency and that includes noise, voice and data. This one has to be fed squelched audio since any unsquelched audio will cause the DCD to activate.

The third and fourth DCD options are somewhat related. The third option needs to see a logic low to be active and the tap point for this is available on the back connector of the Data Engine. The fourth option needs to see a logic high to be active. That is available on a solder pad of the DE1200 board.

The unit will support V.23 operation also, that can be engaged by installing a jumper on the board.

The board supports the rarely used option of full duplex operation. This will work great on point-to-point links of two users. If you are a microwave user, full duplex operation is a snap.

The construction of the board is double sided with no surface mount parts. Because it is double sided, unlike the main board that is multi-layered, you can easily modify it to your liking. The overall construction of the board is excellent. The attendant manual is well written and to the point. So far, the only problem that I have found with the manual is that the schematic has a possible wire labeling error. The RX audio line is labeled "audio out" and the TX audio line is labeled "audio out." The RX audio line is the one that is labeled wrong. That should not present a problem to anyone. I had no problem getting the board to function. I like its operation in the Data Engine, especially with the HT option saving me from having an external network for keying and TX audio feed. The nice thing for me is to run unsquelched, which speeds up operation on the repeater here.

Next month I will continue the Data Engine combo review with emphasis on the 9600 Baud Modem.

NETROM NETROM

What is NET/ROM? First, a little bit of history.

When packet first started, the range was limited to simplex distances. These connections were helped along by the simplex stations acting as digipeaters. All the digipeater did was relay the signal with no handshaking. Handshaking was in the control of the two end stations. This system promoted channel congestion and massive amounts of retries for all of the stations because of many collisions.

NETROM nodes were invented to shorten the handshaking link length and to network various areas together to allow communications over a wide area. Handshaking now became the responsibility of the end user and node instead of end user - digipeater - end user. The nodes assure complete handshaking throughout the path, where digipeaters broke up the path.

To be able to use the nodes, as they are called, you first have to connect to one. You connect to it like you were connecting to a regular station. To find what nodes in your area can be used by you, you first need to monitor the channels and look for packets addressed to NODES. The sending station is a node.

When you have connected to a node, you can get a list of commands from the node by sending a "?." It should reply with the command list. Now to explain the command list.

The NODES command is the first command that you should use when you connect up to a node. This command tells the node to send to you a copy of the routing table that it has established. The routing table contains all the nodes and their aliases for this node. As an example, the node that I use is run under the call of N6NKO-3 and the alias is OWL. The alias is usually a way to inform someone of where the node is located. For instance, you may see aliases like "SFO" for San Francisco and "PHX" for Phoenix. You can use either the alias or the callsign for connect purposes.

The CONNECT command is used to connect to a destination station or to another node. To use the CONNECT command, you just type "connect callsign or alias." You can also type the callsign of the destination station or the callsign or alias of another node. When the connection is completed or if it can't be completed, either way, you will be told of the result. For the sake of argument, N6AAA connects to node N6BBB. After connecting, he would do a NODES command to see what nodes are reachable. He sees that node N6NKO-3 is on and he wants to connect to it. He then sends out a "connect n6nko-3." N6AAA is now talking to N6NKO-3 like he had connected to it in the first place. Now he can issue a connect, a CQ, or see what nodes N6NKO-3 can access.

The CQ command tells the node to put out a CQ. The node will hold onto the information involving the CQ for about 10 minutes and then erase it. This is useful for sending out a CQ to a different area, other than your own, via the node system.

The IDENT command tells the node that you are connected, and it then sends it's ID to you. In this way, you can tell to which node you are connected in the system.

The USERS command tells you who is using the node to which you are connected. It will give the users calls and, if they are in "uplink" to the node, "downlink" from the node, or just have data sent through the node in route to somewhere else.

The ROUTES command tells you what node stations are in direct broadcast range of this particular node. This will

be a shorter list than the NODES command because the NODES command shows which stations can be reached over the entire network.

There is one other command to a node, and that is PARMS. All this does is display the timing parameters that the node uses. It is basically useless to the casual user.

That explains in a nutshell how a node works and how to use the system. One deficiency of the system is that you must connect to your closest node first before you connect to the destination node and then issue a connect for the destination station. It would be great if all you had to do was connect to your local node and then just issue a connect to the destination station and then in turn have the network handle the routing automatically.

NEXT MONTH

Next month, we will cover more of the Kantronics Data Engine combo and continue on with the Beginner's Corner. I may end up delaying the Data Engine review temporarily until the local frequency coordinators authorize a channel for 9600 baud operation.

NEED HELP?

Remember, if you want to hook up a TNC to a particular radio and you can't find the information locally, just call the manufacturer and ask a service representative. He or she can tell you what wires go where and how to go about making the hook up. In some cases, wiring diagrams are even available. Peace.
de Richard, N6NKO

AMTOR

Eddie Schneider, W6/G0AZT
1826 Van Ness
San Pablo, CA 94806

Looks like Autumn (Fall) is with us, although it will probably be getting closer to Winter by the time you read this. It seems like an endless job, raking up leaves in the yard. Trouble is, the darn tree causing the mess, is in my neighbors garden! Maybe I ought to dump the leaves over his fence? On second thought, I think not. He may ask me to take down my beam, whose elements tend to droop over his property!

MAILBOX

I had a very nice letter from Rienhard Richter, DJ1KM, concerning the use of CW filters on the Yaesu FT757GX MK1 and Mk2 when using the rig in either Baudot of AMTOR. Apparently no modifications are required, which should prove very appealing to those of us who do not like digging into their rigs. Vielen danke Herr Richter.

The "secret" with this rig, is that the clarifier has it's own memory. You can select a different mode for receive than for transmit.

Here is what you have to do:

- 1. Establish a link, using USB. Set your modem to "reverse" if you normally use LSB. You may have to play a little with the I.F. shift control.
- 2. Switch the Clarifier ON and select CW-N.
- 3. Set the Shift control to 2 o'clock (approx.). Retune the dial for good reception. Note, the difference in frequency will be 700 hz (approx).
- 4. In ARQ operation, using the above method, you will notice that the main dial and clarifier frequencies will switch back and forth. Also, you will probably hear a small relay "clicking," which will introduce a small delay in your ARQ timing. From what Reinhard says, it does not affect ARQ operation to any great extent. With a little practice, I am sure that 757 users will be pleasantly surprised at how nice it is to copy Baudor/AMTOR, without hearing all the other signals above and below the frequency you are using.

If you have not done the recommended ARQ switching modification for the FT757GX, here they are:
R.F. Board:
Remove C136, C139, C142. Replace R274 and R251 with 220k values. Parallel R268 (220k) with a 12k resistor. P.A. Board. Remove R28 and replace with a 270k. Remove R31 and R39, replace with 220k resistors.

Note: All resistors should be 1/4 watt and PLEASE read caution notes in the July/August issue regarding the above suggested mods.

ARQ 9

I do not wish to make ARQ-9 sound too complicated so I will attempt to keep the information in KISS mode (Keep It Simple Stupid). Before I begin, here is a breakdown of commonly used abbreviations used in the text.

- ISS = Information Sending Station
- IRS = Information Receiving Station
- CS = Control Signal

The USSR Maritime folks have been conducting trials, with the intention of increasing traffic throughput, between ship/shore and vice versa, using what is called "adaptive" coding/decoding.

As most of us know, ARQ-3 (3 characters per block), under ZERO error conditions, will produce a traffic rate of about 67 wpm (50 Baud). As conditions deteriorate, due to QRM, band conditions, etc., the traffic throughput will decrease considerably, and eventually the link will break down.

ARQ-9, (9 characters per block) will enable traffic to be passed at a higher speed, namely a true 100 wpm (75 Baud), but ONLY when operating under ZERO error conditions. In other words, ARQ-9 will NOT overcome QRM/QRN or bad band conditions. It will just pass traffic faster under "ideal" conditions.

In ARQ-3, a "3" character block takes 210ms. There is then a 240ms pause for an acknowledgment code, giving a total of 450ms for the complete cycle.

In ARQ-9, the nine character block will take 660ms, plus the standard 240ms pause for confirmation, making a total of 900ms round trip. Note that in ARQ, one bit takes 10ms, so those of you with a Math degree will be getting your calculators out and figuring, ninety multiplied by seven, only makes 630. What happened to the "spare" 30ms (3bits)? Here comes the fiendish part. In order to maintain a duration cycle which is a multiple of 450ms (ARQ-3), three additional bits had to be added to the 9 characters of 7 bits (9 times 70ms = 630ms), to obtain the 900ms operating cycle in ARQ-9. Those additional three bits are used to detect block loss or insertion, as a result of errors incurred in the reception of control signals on the return frequency.

Earlier on, I mentioned "adaptive" coding/decoding. Basically what is proposed in ARQ-9 is that phasing and rephasing will be done in ARQ-3. Once the two stations have obtained a satisfactory link in ARQ-3, switching to ARQ-9 will be done automatically by the ISS.

How does the ISS know when to change over to ARQ-9? Easy. While both stations are still in ARQ-3, the IRS will send a CS to the ISS, indicating that it has received at least 103 sequences of control signals out of 128 sent by the ISS. Once the ISS receives this CS, it sends a different CS to the IRS, telling it to be prepared to receive information blocks containing nine characters (ARQ-9).

So now both IRS and ISS are in ARQ-9, and traffic input and output should be at 75 Baud (600 char/min), but all of a sudden, along comes some naughty QRM to disrupt the proceedings. On 20 meters, that will not be long in coming. Once the ISS detects that 34 control signal sequences or 16 successive blocks are mutilated by QRM, the ISS sends a CS to the IRS telling it to revert to ARQ-3. The IRS responds with another CS and both stations then go back to 3 characters per block (ARQ-3). When the interference departs, the complete cycle of ARQ-3 to ARQ-9 starts all over again. Confused already? Me too!

Conclusions of tests carried out by ship/shore communications on commercial bands, indicate that there was a transmission rate gain of 20%. ARQ-9 was possible for 67% of the total trial period.

Will ARQ-9 work for us?

At current QRM levels on most of the Amateur bands, I doubt it. However, I must admit that there are times, when one can have a flawless ARQ link, and then ARQ-9 would be useful, if one was in a hurry to send data. It would also be nice to extract long files from our AMTOR mailboxes at a faster rate, thereby limiting access time. Much like changing to 100wpm to access the Baudot MSOs, but for general ragchewing and Dx hunting, we revert to 60wpm.

One must also bear in mind that the commercial stations have a "channelization" system of frequencies to use. Tune around their portion of the spectrum and you will notice that SITOR stations rarely get RQ's or E's, due to the lack of interference, deliberate of otherwise.

If ARQ-9 finds it's way into the amateur world, be assured that compatibility with your older ARQ-3 will be maintained. BOTH stations will have to be equipped with the "adaptive" method before they can use the 9 block system. If one station has ARQ-9 capabilities and the other does not, ARQ-3 will be used throughout the link.

That's all for this month. I hope you all did well in the CQWW/RTTY JOURNAL contest, despite the DELIBERATE QRM from some Packet stations who had the audacity to tell some of us to QSY after we had been on the frequency for hours!! Needless to say, these people did not have callsigns. 73 Gl and DX de **Eddie, W6/G0AZT** ■

(Hits & Misses Continued from page 2)

Jay is a software analyst by trade and his expertise has made the Software Column very popular each month. He is also an avid DXer and Contester and was instrumental in the development of the ARRL RTTY Roundup contest held each year in January. Jay is doing an outstanding job reviewing software compatible with our phase of the hobby.

Betsy Townsend, WV7Y handles the RTTY Journal Awards program and has just recently started a WV7Y QSL routes column. Betsy is very active in MARS and is also an ARRL official in the Pacific Northwest. Our Awards listings are up to date and she has them published a couple of times each year. Want to know more about the RTTY Journal Awards program. Write to Betsy.

John Troost, TG9VT, is our staff member from Central America. John took over the DX NEWS column from Roy, KT1N, when Roy's work load made it impossible for him to continue. John's reputation worldwide as a DXer, Contester, Mailbox SYSOP, and Traffic handler is well known. He brings a great wealth of experience and expertise to the DX NEWS Column each month. His column is very popular and John does an outstanding job of digging up all the latest information on DX for all of us. I'm sure John will tell you that it could not be done without the help of many other dedicated Hams from around the world supplying input. John's newly created "DX Comings" section has become very popular worldwide and is a current list of what is happening in RTTY DX. He also relates all the latest news from IRDXA (International RTTY DX Association).

Dick Uhrmacher, K0VKH, has been writing the MSO Column for nearly seven years. His column is a favorite among the mail box set. Dick also maintains an MSO on the National Autostart Frequency (14.085.625 Mark). His coverage each month has enlightened us all over these many years and I consider him to be the premier MSO expert. Since MSO operators must be available at all times their MSOs are on the air, these stations are to be commended for their dedication to the Digital modes. Want to start an MSO? If so, I suggest you write to Dick and get all the particulars. It's guaranteed that he'll steer you in the right direction.

Who could ask for anything more? I am so thankful to have such a fine staff of writers, who do an extraordinary job of covering the Digital modes for us each month. Sometimes this is a thankless job and other times it is very satisfying. When you write to one of the Columnists and express your appreciation for their contribution each month, you make their job so much easier. Also, when you write to one of them and relate or share your own experiences with them, you make their job easier through your input.

To the RTTY Journal staff members, my simple thanks is not enough because I'm at a loss for words to express my appreciation. But I say, the Journal is a better publication today because of the untiring efforts of every staff member. I would also like to thank my assistant Editor, Don Royer, WA6PIR, for all his help in tutoring me with my computer and helping with all the word and grammar editing.

Add in all the experience and knowledge of our staff members and you have a formidable crew of experts who unselfishly help to make the RTTY Journal an important part of every Digital Ham shack. de **Dale, W6IWO** ■

AEA ...Brings You A Better Experience

Keyers

The Morse Machine MM-3 Keyer

The Morse Machine has all the features you need in a memory keyer, including 2 to 99 WPM speed selection and over 8,000 characters of soft-partitioned memory. Twenty memories store your messages...as short or as long as you like. Memory can be expanded to 36,000 characters. All memory is backed up by an internal lithium battery.

Comprehensive Morse training facilities are built-in. **A Proficiency Trainer** for random code group practice. **A Random Word Generator** which generates four-letter words and **A QSO Simulator** which allows you to call stations, answer a CQ or listen to realistic on-the-air QSO's.

The MM-3 also features automatic serial number insertion and incrementing in any memory message. Use the front panel knob to adjust your sending speed or enter a precise speed with the keypad, toggling between the two at any time. Exchanges can be expedited by having parts of your message sent at a higher speed. You can even add remote switches for four of the memories to send your response or call CQ. The MM-3 can also be programmed for automatic beacon use. The RS-232 compatible serial I/O port provides computer control of the MM-3 and monitoring of the Morse training features.

Packet

PK-88 Packet Radio TNC

Unique operating features with a proven hardware and software design make AEA's PK-88 your best choice in packet radio--now with MailDrop, an 8KByte efficient personal Mailbox. The PK-88 also allows multiple single frequency QSO's, digipeating and networking. It's a superb value, packed with all the most needed packet radio features such as direct interface capability with NET/ROM and TCP/IP. In addition to all the features of a "standard" TNC, the PK-88 offers features not found in any other TNC:

- WHYNOT command - Shows reasons why some received packets are not displayed.
- "Packet Dump Suppression" - Prevents dumping unsent packets on the radio channel when the link fails.
- CUSTOM Command - Allows limited PK-88 customization for non-standard applications.
- Enhanced MBX command- Permits display of the data in I- and UI-frames, without packet headers and without packet headers or retried frames.
- Enhanced MPROTO command - Suppresses display of non- ASCII packets from Level Three switches and network nodes.

Multi-Mode

PK-232MBX Multi-Mode Data Controller

With over 40,000 units sold worldwide, the PK-232MBX is the world's leading multi-mode data controller. Combining all amateur data communication modes in one comprehensive unit, the PK-232MBX offers Morse Code, Baudot, ASCII, AMTOR/SITOR 476 and 625, HF and VHF Packet, WEFAX receive and transmit, TDM, as well as commercial standard NAVTEX automated marine information services.

All software is on ROM.

- 20 front panel status and mode LED indicators
- RS-232 compatible
- Exclusive SIAM™ Signal Identification and Acquisition Mode
- TDM Time Division Multiplex decoding
- PakMail™ mailbox with selective control of third-party traffic
- FAX printing - supports most printers
- Two radio ports
- Host mode for efficient program control of the PK-232MBX
- KISS mode for TCP/IP networking protocol compatibility
- 32K RAM lithium battery-backed
- Many features for the digital SWL

Antenna Tuners

AT-300 and AT-3000 Antenna Tuners

For tuning perfection, choose AEA's AT-300 (300 watt) or AT-3000 (3 kW) antenna tuners. Quality and exceptional engineering are built-in for maximum performance and long operating life.

The low-pass design provides more harmonic attenuation for lower TVI and allows matching to a much wider range of antenna impedances than common high-pass designs.

The AEA tuners feature a frequency compensated dual-movement SWR meter for ease of tuning with a front panel power range switch. Minimal SWR is achieved by inductors with 18 (AT-300) and 20 (AT-3000) taps. AEA's exclusive patent pending CAM switch design on the AT-3000 provides accurate tuning. The built-in front panel antenna switch allows you to easily select two unbalanced (coax-fed) antennas, a dummy load or a balanced antenna.

Advanced Electronic Applications, Inc. 2006-196th St. SW/P.O. Box 2160 Lynnwood, WA 98036 206-775-7373

Specifications subject to change without notice or obligation. Dealer inquiries invited. Copyright 1990.

SPRATLY ISLAND ON RTTY

Despite numerous delays in the Spratly DXpedition start date, 1S0XV commenced operation on April 18, 1990.

We had to overcome many problems, such as paying for transportation, buying supplies and so on, because we didn't have funds on hand to pay for everything. INDEXA donated 2 sets of TS520S with VFOs, SB200 and Mosley antennas TA33MU, in addition to $1,000 it sent us. Most of the expenses were covered by the joint Soviet-Vietnamese company "Kiulong," that acted as sponsor for this expedition.

We had our share of mishaps on the trip. On the very first try, the home-made RTTY unit went up in smoke, though it was successfully used prior to the trip at RL8PYL, 3W1A, XC0SU, as well as 3W3RR. About a week later, we managed to restore the unit and on April 25th made the first RTTY QSO from Spratly Island with JA0HHW. The first North American to work us was K2ENT, Europe, OZ7GI. Most operating was conducted on 14, 21, and 29 Mhz, we also made QSO's on 40 Meters and one QSO on 80. UZ9CWW worked us on 5 bands! In 5 days we made 488 QSO's, among them; 106 with USA stations, 149 with Japan, 179 with Europe, and 54 for all others. The average speed was one QSO per minute. A CW filter (250 Hz) was used, and that helped in the pile-ups that ensued.

RTTY operator was Alex, UL7PCZ, from club station RL6PYL. Several days before the expedition completed it's operation, the RTTY unit failed once again. It was unfortunate since we wanted to give a new country to many who needed to work us.

We'd like to thank JA1ACB, I5FLN, TG9VT for their support and to all others who believed in us and supported this expedition with donations. We are also appealing to Amateurs who can help us with a RTTY interface for future expeditions. Please write to: Alex Lebedev, UL7PCZ, P.O. BOX 43, Temirtau, Kazakh Republic, 472310, USSR. QSL cards for 1S0XV may be obtained via W4FRU to BOX 308, Moscow 103009, USSR.

Best wishes to all, see you on RTTY from another exciting spot. 73 de UL7PCZ, RL8PY, RL8PZ, 3W3RR

Ed: *Alex, UL7PCZ has been instrumental in putting stations 3W1A, RL8PYL, XV0SU and 1S0XV on the air. He is an avid RTTY DXer and we can count on him for another new one soon. Your support of Hams like Alex is a worthwhile donation. Don't hesitate and give as much as you can to help RTTY DXpeditions.*

Alex, UL7PCZ, collects some beautiful sea shells during slow periods of the DXpedition.

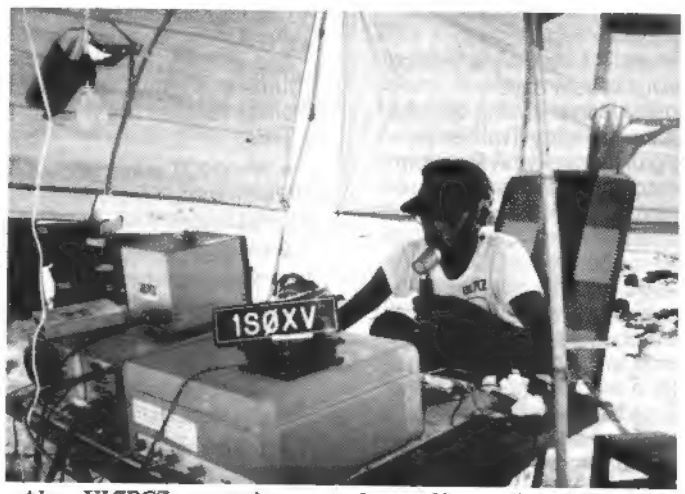

Alex, UL7PCZ, at station controls, working a little SSB, while waiting for demodulator to be repaired.

Yuri gives us his most professional DX pose, just before retiring to his beautiful portable home on Spratly.

TNC TO MICROPHONE CONNECTIONS

The following are microphone connections for some of the popular TNC's and rigs being used on the air. This information was prepared by the KC4LWI DX Cluster and obtained via one of the W6GO Databases but can also be found on many of the PacketCluster's around the Country. Under (MFJ) column, is the 5 pin din connections for MFJ TNC's.

HT'S

Many of today's HTs are different in the way they key the mic. They operate the Audio as an AC Signal, and the PTT as a DC signal on the same wire. This is very simple. AC is not going to allow the radio to transmit, but the DC can produce hum. On MFJ TNCs, hum can be caused if you jumper the TNC. So, as a solution simply use the hookup (IT WORKS) that follows:

```
TX Aud ---CCC-----
                  :
          ----- Small Connector Center
                  :
PTT Aud ---RRR-----
```

RRR = 30K resistor (just about any value will work)
CCC = .1uf Capacitor (small ceramic cap)
RX Audio = Large 1/8" center connector
GND shield = shield of connectors

Note: Not all HTs are hooked up this way.

	MFJ	PK232	PK88	DRSI	KAN VHF	KAN HF
TX	1	2	2	1	1	1
PTT	3	5	3	5	3	3
RX	4	1	8	3	8	4/5
GND	5	4	1	7	1	6/8/9

ICOM 4 Pin Connector

ITEM	RADIO	MFJ	PK232	PK88	DRSI	KAN-VHF	KAN-HF
TX	1	1	2	2	1	1	1
PTT	2	3	5	3	5	3	3
GND	4	2	4	1	7	6/8/9	2
RX	BACK	4	1	8	3	4/5	6/7

ICOM 8 Pin Connector

ITEM	RADIO	MFJ	PK232	PK88	DRSI	KAN-VHF	KAN-HF
TX	1	1	2	2	1	1	1
PTT	5	3	5	3	5	3	3
GND	6/7	2	4	1	7	6/8/9	2
RX	*	4	1	8	3	4/5	6/7

* Some have audio on Pin 8, others on back of radio.

YAESU 4 Pin Connectors

ITEM	RADIO	MFJ	PK232	PK88	DRSI	KAN-VHF	KAN-HF
TX	2	1	2	2	1	1	1
PTT	3	3	5	3	5	3	3
GND	1	2	4	1	7	6/8/9	2
RX	BACK	4	1	8	3	4/5	6/7

YAESU 8 Pin Connectors

ITEM	RADIO	MFJ	PK232	PK88	DRSI	KAN-VHF	KAN-HF
TX	8	1	2	2	1	1	1
PTT	6	3	5	3	5	3	3
GND	7	2	4	1	7	6/8/9	2
RX	BACK	4	1	8	3	4/5	6/7

NOTE: FT-270/2700 require mic DC block cap & series diode w/PTT

YAESU Ft-208 Wiring

ITEM	RADIO	MFJ	PK232	PK88	DRSI	KAN-VHF	KAN-HF
TX	1	1	2	2	1	1	1
PTT	3	3	5	3	5	3	3
GND	4	2	4	1	7	6/8/9	2
RX	2	4	1	8	3	4/5	6/7

KENWOOD 4 Pin Connectors

ITEM	RADIO	MFJ	PK232	PK88	DRSI	KAN-VHF	KAN-HF
TX	1	1	2	2	1	1	1
PTT	2	3	5	3	5	3	3
GND	3/4	2	4	1	7	6/8/9	2
RX	BACK	4	1	8	3	4/5	6/7

KENWOOD 5 Pin Connectors

ITEM	RADIO	MFJ	PK232	PK88	DRSI	KAN-VHF	KAN-HF
TX	1	1	2	2	1	1	1
PTT	2	3	5	3	5	3	3
GND	4/5	2	4	1	7	6/8/9	2
RX	BACK	4	1	8	3	4/5	6/7

KENWOOD 6 Pin Connectors

ITEM	RADIO	MFJ	PK232	PK88	DRSI	KAN-VHF	KAN-HF
TX	1	1	2	2	1	1	1
PTT	2	3	5	3	5	3	3
GND	6	2	4	1	7	6/8/9	2
RX	BACK	4	1	8	3	4/5	6/7

KENWOOD 8 Pin Connectors

ITEM	RADIO	MFJ	PK232	PK88	DRSI	KAN-VHF	KAN-HF
TX	1	1	2	2	1	1	1
PTT	2	3	5	3	5	3	3
GND	6	2	4	1	7	6/8/9	2
RX	*	4	1	8	3	4/5	6/7

* Some KENWOOD's have Audio on pin 8, while others use the back.

TENTECH 4 Pin Connectors

ITEM	RADIO	MFJ	PK232	PK88	DRSI	KAN-VHF	KAN-HF
TX	1	1	2	2	1	1	1
PTT	3	3	5	3	5	3	3
GND	2	2	4	1	7	6/8/9	2
RX	BACK	4	1	8	3	4/5	6/7

TEN TEC 1/4 Phone Plug

ITEM	RADIO	MFJ	PK232	PK88	DRSI	KAN-VHF	KAN-HF
TX	RING	1	2	2	1	1	1
PTT	TIP	3	5	3	5	3	3
GND	SLEEVE	2	4	1	7	6/8/9	2
RX	BACK	4	1	8	3	4/5	6/7

AZDEN 12 Pin Connection

ITEM	RADIO	MFJ	PK232	PK88	DRSI	KAN-VHF	KAN-HF
TX	12	1	2	2	1	1	1
PTT	9	3	5	3	5	3	3
GND	2/11	2	4	1	7	6/8/9	2
RX	BACK	4	1	8	3	4/5	6/7

AZDEN 8 Pin Connection

ITEM	RADIO	MFJ	PK232	PK88	DRSI	KAN-VHF	KAN-HF
TX	1	1	2	2	1	1	1
PTT	7	3	5	3	5	3	3
GND	2	2	4	1	7	6/8/9	2
RX	BACK	4	1	8	3	4/5	6/7

DRAKE 4 Pin Connection

ITEM	RADIO	MFJ	PK232	PK88	DRSI	KAN-VHF	KAN-HF
TX	1	1	2	2	1	1	1
PTT	2	3	5	3	5	3	3
GND	3	2	4	1	7	6/8/9	2
RX	BACK	4	1	8	3	4/5	6/7

Betsy Townsend, WV7Y
P.O. BOX 644
Spokane, WA 99210

WV7Y QSL Routes

These QSL routes were gleaned from the WS7I PacketCluster but, for the most part, come from the DX1 reports. The accuracy has not been checked, other than by the operators. For those of you just starting in RTTY DXing, I would highly, HIGHLY, recommend the W6GO/K6HHD QSL Manager List, because it has very accurate routes. For more information, drop them a line at The W6GO/K6HHD LIST, P.O. Box 700, Rio Linda, CA 95673-0700. It's about $20 a year and is the handiest source of accurate QSL information around.

If any RTTY DX station is looking for a manager, drop me a note, I might be interested!

73 & 88, Betsy, WV7Y

3B9FR VIA Box 31, Rodriguez Island, Indian Ocean
3DA0BW and 3DA0BX will QSL VIA Box 57, Big Bend, Swaziland
4K0ADS QSL VIA RW3AH
5N3ETP QSL VIA N6QLQ
8P9HR QSL VIA K4BAI
8P9HQ QSL VIA K3ZR
8Q7DA QSL VIA DL3RBF
9Q5EE QSL VIA K1RH
9J2BO QSL VIA W6ORD
BY4AA QSL VIA DJ6BU
BZ4DAB, QSL Box 085-205, Shanghai, China
CY9CF QSL VIA Box 4204, F-97500, St Pierre Et Miquelion Island VIA Canada
CY9DX QSL VIA FP5DX
FW1FM VIA Box 20, Futuna Island
HC5J VIA WV7Y (1990 CQWW RTTY)
HK0TU QSL VIA HK3DDD
J39BS QSL VIA WB2LCH
PJ2/OH2BGD QSL VIA HOME CALL
PJ8JP QSL VIA AB1U
RA2FB indicates that Box 261, Sovetsk, 238700 USSR is his QSL address. UI9ABV QSL VIA Box 40/1 Tashkent, 700040, Uzbek, USSR UW0LZ VIA Box 75, Vladivostok 690090 USSR
ZK3KY QSL VIA Box 3, Tokaimura, Ibaragi, Japan
ZL0AIC QSL VIA HB9AAA
ZS9J Leo Heinonen, 80 Sixth Street, Parrhorst, 2193, South Africa

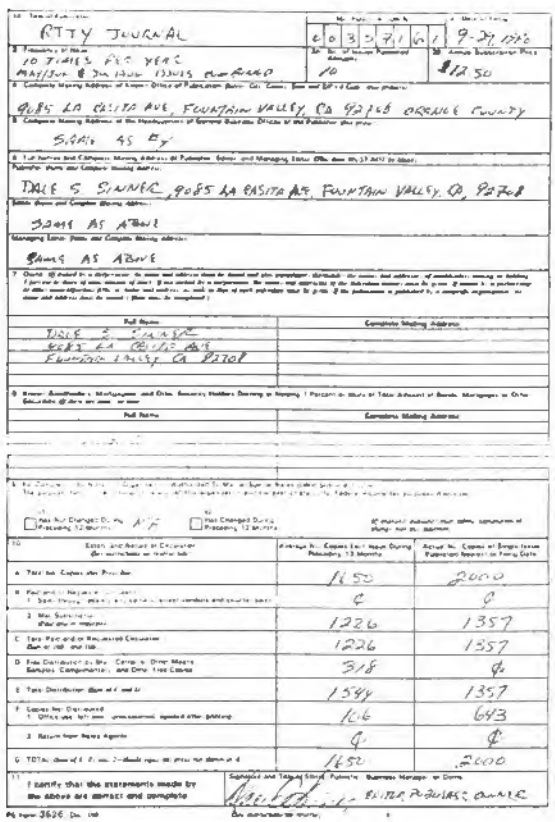
RTTY JOURNAL
6 0 3 5 7 1 6 1
9-29-1992
10 ISSUES PER YEAR
MAY/JUN & JUL/AUG ISSUES COMBINED
10
$12.50
9085 LA CASITA AVE, FOUNTAIN VALLEY, CA 92708 ORANGE COUNTY
SAME AS ABOVE
DALE S. SANNER, 9085 LA CASITA AVE, FOUNTAIN VALLEY, CA, 92708
SAME AS ABOVE
SAME AS ABOVE
Full Name
Complete Mailing Address
DALE S. SANNER
9085 LA CASITA AVE
FOUNTAIN VALLEY CA 92708
Full Name
Complete Mailing Address
N/A
Average No. Copies Each Issue During Preceding 12 Months
Actual No. Copies of Single Issue Published Nearest to Filing Date
A. Total No. Copies (Net Press Run)
1650
2000
B. Paid and/or Requested Circulation
1. Sales through dealers and carriers, street vendors and counter sales
0
0
2. Mail Subscription (Paid and/or requested)
1226
1357
C. Total Paid and/or Requested Circulation (Sum of 10B1 and 10B2)
1226
1357
D. Free Distribution by Mail, Carrier or Other Means Samples, Complimentary, and Other Free Copies
318
0
E. Total Distribution (Sum of C and D)
1544
1357
F. Copies Not Distributed
1. Office use, left over, unaccounted, spoiled after printing
106
643
2. Return from News Agents
0
0
G. TOTAL (Sum of E, F1 and 2—should equal net press run shown in A)
1650
2000
11. I certify that the statements made by the above are correct and complete
Signature and Title of Editor, Publisher, Business Manager, or Owner
DALE S. SANNER, OWNER

A Winning Combination . . .
The PCI-3000 and SPT-2 from HAL!

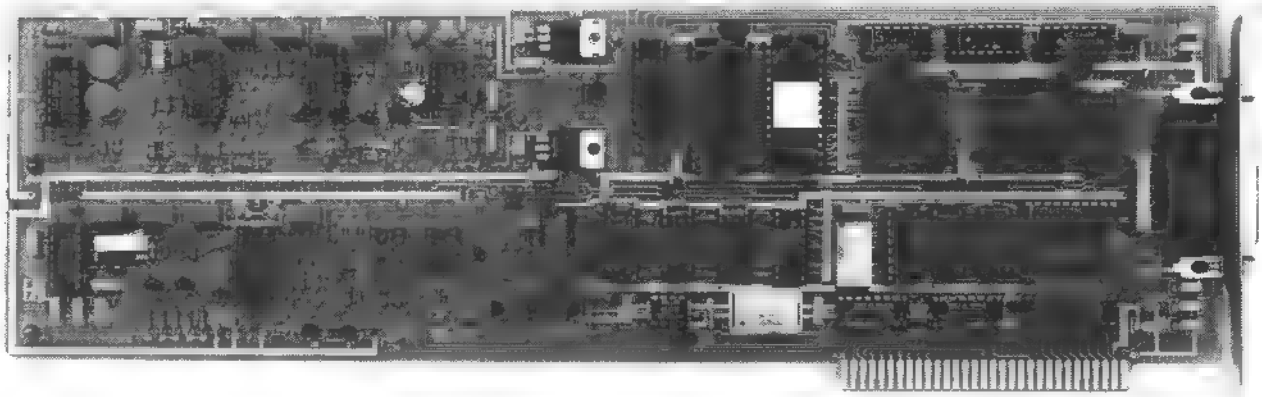

The HAL PCI-3000/PC-AMTOR system is designed to put your PC on the HF bands with outstanding performance at an affordable price. Amtor allows you to get through when other methods fail If you've ever been DX-ing with someone on Amtor when 20 meters dies out in the evening, you know what we mean. Things may slow down, but you can usually keep up the QSO!

The PCI-3000 doesn't limit you to Amtor. You also get high-performance Baudot and ASCII RTTY, CW, and Search Mode. Search Mode lets you simply tune in the signal—we take it from there. The PCI-3000 automatically finds the correct code, speed, and polarity. No more guessing!

If you want to communicate on HF, do it right with the PCI-3000! Call HAL Communications—your AMTOR source—and put your PC on the air today!

SPT-2 Spectra-Tune:

For ease of tuning your PCI-3000, add the SPT-2 Spectra-Tune. The Spectra-Tune lets you tune in CW and RTTY signals quickly and accurately with a calibrated linear 30-segment bar graph. The bar graph represents a 600 Hz range of the audio spectrum, centered at 2210 Hz for RTTY and AMTOR, and 800 Hz for CW. Calibrated marks indicate the proper frequency for AMTOR, RTTY, and CW tuning.

A cable is included with the SPT-2 for providing power and control from the PCI-3000. The rear panel of the SPT-2 provides convenient "RCA" phono connectors for all radio connections. This avoids having to make radio connections directly to the PCI-3000. Enhance your PCI-3000 system with the SPT-2 Spectra-Tune Today!

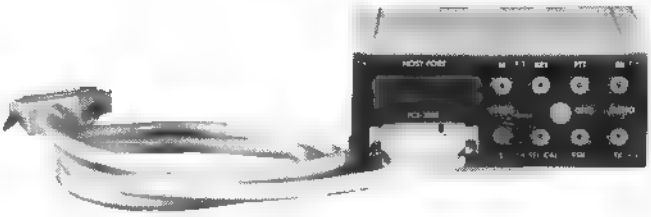

HAL Communications Corp.
P.O. Box 365
Urbana, IL 61801
Phone (217) 367-7373
FAX (217) 367-1701

PCI-3000/PC-AMTOR with software **$395.**
SPT-2 Spectra-Tune with cable **$169.**
FIL-1 Amtor/RTTY filter (installs in SPT-2) **$69.**

(Low tone export models available.)

CIRCLE 58 ON READER SERVICE CARD

PACKET PICTURES

byline: Gregory McIntire, KE0UV
907 Ziebach #92
Belle Fourche, SD 57717

This is in response to the recent plea in the RTTY JOURNAL for "reader input." If you are interested in pictures or other digitized transmissions, here is what my brother, KG7GN, and I have been doing on HF Packet lately.

I use a Commodore 64 and an AEA Pk-64 controller (TNC) for Packet operation. We decided to devise a way that we could send pictures to each other via HF Packet. The format for our hi-resolution (320 X 200 pixel) had to be something that would be compatible with both the C-64 and the Mac. We decided on a format that would be simple to understand, for each of us, and then individually, we wrote software for our computers to change our "simple" format into one that our computers would display on their monitors.

The procedure we use to send each other pictures is this: Each of us (sending station and receiving station) must put the TNC in TRANSPARENT mode. This allows the use of the EIGHT bit, extended ASCII character set (all 256 characters). When the picture file is transmitted, the receiving station stores it in a "receive buffer". Then after receiving the entire file, it is SAVED to disk. Then we use the software we have written to change this SAVED disk file into a file that is compatible with our computers to load up onto their hi-res screens. To put it another way, my C-64 uses a 8 Kbyte file (32 blks on the disk directory) in a specific format to load onto a hi-res display screen. There are several commercial and public domain "drawing" programs that use this same format for hi-res files. The program I have written for my C-64 simply takes the received (via Packet) file and changes it to a format that my hi-res drawing programs will load and display. The program will also do the reverse, i.e., change a regular C-64 hi-res file to our "simple" format for transmitting via Packet.

Another thing that our format does is "compress" the file. Some types of pictures will compress much smaller than others, for transmission and reception. On the average, most of our 8 Kbyte files compress to a length of about 4Kbytes, using our compression scheme. This cuts in half the amount of time required to transmit them. The file is "decompressed," or expanded when it is changed back to C-64 or Mac format.

We chose a method of formatting the picture data such that we could both easily understand what order the data was in. This was due to the fact that we live 600 miles apart and couldn't sit down together and debug, so the format had to be very "straight forward." We simply start at the top right corner of the screen (picture) and call the first eight horizontal pixels the first BYTE of data. The second byte of data is the next eight horizontal pixels (bits), immediately to the right of the first byte. This continues for 40 bytes (320) pixels. Then the 41st byte starts back at the left side of the screen (picture), but ONE pixel below the 1st byte.

This seemed to be a very logical way of looking at the picture, i.e. left to right and top to bottom, just like the way you read. Our computers, on the other hand, each want to receive the consecutive bytes of data in a different order. And the C-64 looks at the data differently than does the Mac. So, that is the reason we each wrote software to accommodate our own computers. The principle should work just the same for IBM compatibles. Neither of us owns an IBM type though, so we don't have software for them.

Upon examining the actual data in several different types of picture files, we discovered that there are usually lots of ASCII O's in succession and lots of ASCII 255's in succession. So instead of transmitting each and every O and 255, the software counts the number of consecutive O's and 255's and then transmits a single O followed by a single number which designates how many consecutive O's follow. Same rule applies to ASCII 255's. This is our compression scheme. It compresses some type of files, such as graphs and simple line drawings, down to as little as 1/4 as long (2 Kbytes) or even less.

We have found that on the average it takes about 8 to 10 minutes to transmit a picture on HF packet. Although, we usually have fairly good propagation and no QRM. VHF picture transmissions (1200 Baud Packet) should go even faster.

We chose the 320 pixel by 200 pixel picture size for two reasons. 1) It is the full screen size of the C-64. 2) A larger picture would take longer to transmit. To send a picture twice as large (twice as tall and twice as wide) would take 4 times as long to transmit. For these reasons, we have settled on the 320 by 200 pixel picture (64,000 pixels).

So far, our sources of pictures to send each other range from graphs created with other software, such as a MUF program, to schematics created with schematic drawing programs, to various actual pictures either hand drawn with drawing programs or "digitized" pictures created with a TV camera and a digitizer. In my opinion, the schematics and graphs

are the most useful types of pictures to send and receive. For instance, KG7GN wanted to see how his MUF program compared to mine. So he created a graph of the MUF for a given day and solar flux, etc., then sent the graph to me via HF Packet. Then I ran my MUF program and plotted it's results right on his graph and sent it back to him, all within a few minutes time. I also find it very useful to send KG7GN schematics of circuits I am trying to build when I need a little "expert" advice. But aside from it's usefulness, we have a lot of fun just sending any old picture (hi-res computer picture) that we can come up with. I recently purchased a video digitizer for the C-64 to take pictures with my little black & white camera for an inexhaustible supply of computer printable pictures.

Just thought I'd share with everyone, what some of us "digital nuts" are doing for fun. The printouts shown are "pictures" that I have received from my brother KG7GN, plus some pics that I have sent to him.

de Greg,KE0UV ■

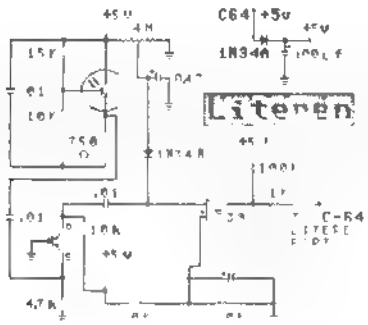

SOFTWARE

Jay Townsend, WS7I
P.O.BOX 644
Spokane, WA 99210

NEW FOR THIS MONTH

Quite a few things this month are in the works. First, I now have the HAL Communications PCI-3000 up and running with the APLINK software. All acomplished since returning from Ecuador. The unit worked without a flaw on this software. The AMTOR/PACKET Link (APLINK) is a software package that runs an AMTOR MailBox and a Packet BBS on the same set of messages and bulletins. It is the answer to all the HF Packet problems. Using Amtor on HF and Packet on VHF, the traffic, messages, and bulletins flow smoothly. There are a bunch of things that you need to do to get it all up and running, but the software instructions are fairly clear. I only used the APLINK board on HF for a short time and not as a mailbox, so I didn't encounter problems that a full-time BBS might have seen. The Hal PCI-3000 worked flawlessly and I would highly recommend it for Sysop's as well as users of APLINK.

The APLINK software works very well and the user of the APLINK system needs only to understand a few commands. See box below for commands.

These are the basic APLINK commands and for a fuller discussion of Amtor and the APLINK, I would suggest you give the November 1990 QST article by Jim, N2HOS, a look. His complete discussion should give you a very good start. Also look at Bill Henry's CQ Magazine article on Amtor in the November 1990 issue. By the way, after listening to another of our columnists discussing the Packet situation on 14 Mhz, I might suggest to him that he move his APLINK up to 14.094 and see how long the Packet Station stays around.

CQWW PHONE CONTEST

I have just returned from the CQWW Phone contest, working out of John, W7XR's in the Seattle area. My friend Randy, W7TJ, and I were invited from Spokane and, along with many world class operators, managed to set a new CQWW Phone record of 12 million for the W7 call area. While there contesting, K7RI and I ran the 10 meter position. Tom, K7RI, is the guiding force behind a software package that I want to discuss this month. It is the K7RI CQWW logging program and is available for $35 from K7RI Software, 3955 S. West Ida ST., Seattle, WA 98136

APLINK COMMANDS

NEW (Callsign) (Selcall)	This registers the new user.
LOGIN (Callsign)	LogOn the System
H	Help
L	Lists all messages (not on some)
LT (Callsign)	List from Callsign (Usually You)
LF (Callsign)	List to Callsign (Usually You)
NTS	Lists all NTS Messages (Traffic)
R #	Read message #
RN	Read all new
SP (Callsign)	Send a message to Callsign
ST (id1) @ (id2)	Send NTS traffic
T	Talk mode to Sysop
LOGOUT	Logs you off

The Amount of Information contained on the screen is very impressive!

This program, while currently configured for CW and SSB in the CQWW contests, will be made available if there are enough interested people in other modes. I know that Danny, K7SS, ran it in the CQWW RTTY contest. The program is similar to the now famous K1EA "CT" logging program, but goes far beyond it in features and useful abilities of a program (bells and whistles). For example, one of the nicest features, that would be most useful in RTTY contesting, is the ability to handle fragmented calls and to do several calls at a time. The program, which, by the way, comes with the most complete manual I have seen for a logging program, allows multiple entry of callsigns on the same line. It will let you take a suffix like ACB (given in a fragment or copied as part) and let you add JA1 to it. When you hit "return" the call is put together and logged. You can put up to 5 calls on the line at the same time and these can be complete or partial calls.

The amount of information that is contained on the screens is very impressive and most useful during a contest. It visually shows the zones that have been worked and are needed on one side of the screen. These change colors as they are logged. It keeps track of what countries are worked and needed. It indicates, every time you work a multiplier what other bands are needed for that station. The logging program does partial call sign searches, and multiple entry of calls as well.

K7RI software will indicate beam headings to countries and do many other nice tasks to make the operator's job easier. Tom, and I ran the software through its paces and I must say I was very impressed with it. The program written in Turbo Pascal will run on monochrome monitors, but Tom recommends color to get the most impact out of the logging program. One of the nicest features of the program is its ability to log after the fact. Since many of you have only one computer and are running it during a contest on RTTY, AMTOR, or PACKET and keep a hand log...this fills the ticket. In fact only 10 meters was logged live at W7XR's and the other bands were done during slack times. It will increment and decrement the time by minutes and hours and you just type in the information. I entered all the 160, 80, and most of the 40 meter logs and the program worked great. It also prints dupe sheets, sheets of countries, zones worked and not worked by band and on and on.

Being a software programmer by profession, to a certain extent, I really can't believe that someone would go to as much trouble as Tom, K7RI, has to bring out a product at a price so inexpensive and affordable for all. Tom also seems to be more than willing to develop different versions and was very keen on putting in any features or changes that I might suggest. I would recommend the current version very highly for CW and/or SSB CQWW contesting and, if he develops one for CQWW RTTY, I, for one, will have one of the first copies. It is my understanding that there are other versions for other contests, but I haven't seen any of those.

TG9VT LOGGING PROGRAM

Finally, this month I want to discuss a little logging program that John, TG9VT sent me many moons ago. I thought I wrote about this once before, but can't seem to find it in print. The program is the Ham Radio Record Keeper and is available from John Troost, TG9VT. It is a dBase based record keeping system for DXCC and the version I have, 4.1B, does a terrific job in tracking all the DXCC countries that I work. I have upgraded the record keeping to my computer, finally, and really enjoy the program. It prints out reports that are invaluable and, in fact, brings up one more of my little pet peeves.

PET PEEVE

Where 'O where are all my Russian QSL cards ??? I still need a UA9YE card from 21Sep88 at 0122z on 14 Mhz. I just finished watching Betsy, WV7Y, (my XYL) fill out 3 cards to that same station for our 1989 HC8 trip, so I know that the mail is getting through. I'm also still looking for my Latvia and Estonia cards as well. You know, I can understand not getting a card from 6T2MG which is a war torn country, but the rest of this is getting out of hand. I worked the Spratly operation and got not a single card back from Moscow. By the way, for any that need a HC5J card, just QSL to Betsy, WV7Y.

That's it for this month. Please be sure to write or leave a message at my Packet address. de **Jay, WS7I** ■

Packet addr: WS7I @AH6AA.ID.USA

Kantronics**KAM**

If you're looking for a flexible all-mode, if you're looking for a TNC to operate both HF and VHF digital modes, if you'd like one unit to operate RTTY, AMTOR, WEFAX, CW and Packet on HF, yet be keystroke switchable to VHF for packet, then you've found it, the Kantronics All Mode (KAM). Just ask a user!

It's the most flexible and evolutionary all-mode on the market! Since its first appearance in 1986, we've generated four major firmware upgrades, adding new capabilities each time. With release 3.0, in August of 1990, we added software carrier detect for squelch-free operation, reverse personal bulletin board forwarding, the new AMTOR 625, NAVTEX/AMTEX, a command to restore parameters and more!

And the KAM is tops in flexibility. The HF demodulator is user programmable, allowing keystroke selection of tone pairs. You can select any of the standard shifts (170, 425 or 850 Hertz - handy for MARS ops!) or you can set the MARK SPACE tones to any desired value within the unit's range, in one Hertz steps! You can program baud rate too, allowing for the operation or listening to off-rate baudot or other HF digital transmissions.

On CW we stand head-and-shoulders above the rest. You can program CW filter bandwidth and center frequency to match receiver needs. If your HF rig doesn't have a CW filter, you can 'close it down' by decreasing the KAM's CW filter bandwidth! Better yet, you can match the KAM's CW demodulator filter to your particular receiver CW filter.

On packet you can operate on both HF and VHF simultaneously, enabling a host of new possible modes of operation. For example, you could have a QSO on HF packet while leaving your VHF channel available for mail or connect. Or, you could set your station up as a gateway, allowing other stations to digipeat from VHF to HF or vice-versa. Or, you could have an RTTY QSO while leaving your VHF packet mailbox active. And more, with firmware update 3.0, your personal packet mailbox (PBBS) is enabled to allow reverse forwarding of messages to a larger BBS, such as RLI And on and on!

And the unit is PC or C-64 friendly: an internal jumper allows TTL or RS-232 serial port operation without the additional need for a TTL/RS-232 adaptor for the C-64 serial port, saving you money.

The three-manual set is outstanding too, consisting of installation, operation and commands. All are indexed and cross referenced to each other for quick access to related information. The Operation's Manual contains information for beginners too

Specs: size 1-3/4" by 6" by 9", weight 2-1/2 lbs, power requirements nominally 12 VDC at 300 ma. Input sensitivity 20 mvpp (FM), 100 mvpp (AM). Audio drive jumper selectable from 100 mv to 1.6 vpp.

Options: a 2400 baud QPSK modem for VHF/UHF operation, an MSK modem for advanced HF use, and a battery backup or SmartWatch for preserving mailbox contents/time during a power interruption.

Modes: CW, RTTY, ASCII, ARQ, FEC, WEFAX, AMTOR-625, NAVTEX/AMTEX and PACKET.

So there you have it, the flexible and evolutionary all-mode. For a detailed specification sheet contact Kantronics. The KAM, the all-mode that evolves with the state-of-the-art.

Kantronics 1202 E. 23rd St., Lawrence, KS 66046, 913.842.7745 TELCO BBS 913.842.4678

DX NEWS

John Troost, TG9VT
444 Brickell Ave, Suite 51-265
Miami, FL 33131-2492

OCTOBER HAPPENINGS

All in all, October was a good month for DX, in spite of often poor propagation. Or maybe I am prejudiced, as I worked four new Countries in 16 days. Some of this activity was thanks to the Expeditions for the CQWW SSB Contest, some of which engaged in RTTY and AMTOR before and after the contest.

Outstanding among these was **CY9CF, ST. PAUL ISLAND**, by Patrick, FY5DX, who made many of the guys happy with a New One: sorry he could not have stayed a little longer. Then there was Kyoko, **ZK3KY**, doing a fantastic job from **TOKLEAU ISLAND** (Now on her way to **BANABA**).

Then Ralph, **Z21GU** came on the air from **ZIMBAWE**, a newcomer on RTTY and AMTOR: look for him on Saturdays about 1500-1800Z on 10 Meters.

To top it all off, the **MALPELO ISLAND** Group, **HK0TU**, came up on schedule on 3 November and Raul was good enough to give an RTTY QSO on 5 Bands.

Of the many seen in October were, among others: A41KB, T77C, UI9AVB, 5Z4BI, J73WA, FR5DE, FR4FR, FR5ZD, FR0P, RA2FB, RF6FC, UM8NC, UC2OF, UO5OK, UA3TT/RF1F, UW3TT/UJ4J, OX3DE, FW1FM, VP8BFH, TL8A, V51GB, V51P, 6W1HF, TY1DS, TU2BB, JY9SR, 9V1JY,, ZD7JAM, ZD8BOB, ZD9BV, BV1VB, BV0GV, BZ1RC, OY9JD, BY1QH, BY4AA, JX9CAA, JX7DFA, 5V7DP, YI1BGD, ZS9J, 5W1KT, TZ6VV, J28TY, HK8/HC5K, Z21EZ, BQ7DA (now gone), 9J2BO (on 10 M), 3DA0BW, 3DA0BX, 4U1ITU (by a Chech operator), D68VT (now gone), 6W6JX, ZK1AP, KP2BH, KP2N, 9H4B, XX9JN, ST/DF3DS, CN8YP, CN8JF, 6Y5KW, V73BN and PJ9W: plus the myriad not listed here, enough to give you a DXCC in a month, providing you give up eating, sleeping and working, and have at least one transceiver and antenna for each band.

UZ9CWA, Serge, asked me to tell you to send any QSLs to him for contacts around the CQWW RTTY Contest for RH7E, UH7E/UZ0CWA or UH7E/UZ9CWA (see QSL Routes, Oct. issue).

Taka, JG1NBD, reports he was only able to make 287 RTTY QSOs from S79NBD, due to poor conditions. His card is oversized, so please do not send yours via the JA Bureau, but directly to Taka San. The JA Bureau finds the cards too large to handle.

And talking about QSLing, unfortunately, some guys just don't QSL! Yes, the YV0AA cards are printed and mailed, but what about some of those like HH2DZ (even with N1DRS as a QSL Manager), V21AR, 5N4/GW6PQQ, TJ1DL (with DK8SO as QSL Manager), 5H1HK (with JH4RHF as manager), and so I can go down the list. Goes to show, if a guy gives you a QSL manager, is it a sure thing?

And by the way, my Manager is W3HNK, and if you made the contact you can count on a QSL: but please do not send me a card direct to my Call Book Address, the Local Post Office likes to eat them. And if you send it to my Miami Address, at the Heading of this Column, it costs me $1.25 to receive it, via Air Courier. You can send it via the Bureau: I just received about 100 Cards from 1988. consequently, if I mail the replies today, you can hope to see your card in 1993. And that is not just my problem, it is the problem of every DX station in Developing Countries.

AMTOR QRM

I should like to digress here for a minute and talk about QRM on AMTOR. As most of you know, I run an APLINK BOX for DX News and for General Traffic. Amtor is a very robust mode, but a good link will not stand up under a very strong station coming on the frequency and calling **MY SELECT CALL**, in an attempt to link me.

It may be that many stations do not have adequate tuning equipment: the little bar graph on the popular multi-mode TNCs is surely not an accurate way for seeing if the frequency is occupied or not.

This type of QRM, I am sure, is completely unintentional, but bothersome nevertheless. All this could be avoided by a cheap OSCILLOSCOPE, the kind which will give you a horizontal and a vertical input, and not only will the traces show you if the frequency is in use or free, it will also tell you if you and the station you are linking are Zero Beat: really a small investment if you are even half way serious about AMTOR and use Multi-mode Unit: plus it is equally helpful on RTTY.

HF PACKET RACKET

It seems, if I recall, that I have complained numerous times about the incursions of HF PACKET into our RTTY segment of the band.

This time, I should like to look at some of the technical aspects of HF Packet. Packet, under the X.25 Protocol, was designed by Telecom for Landline use and required the quiet environment that most Landlines give you. It was adapted as AX.25 for use on VHF, in FM, and turned out to be very efficient for that use, in that quit environment, at high data rates.

Along came the Multi-mode TNC: It offered Packet on HF, and everyone, including me, wanted a hand at it. Well, with me, it did not last long: HF is not a quiet environment, and consequently HF Packet under the current Protocol

appeared a very inefficient way of communicating: absolutely exasperating to pass a full sentence, let alone a complete message, with an infinite number of "try-outs." Why is that? Well, the shortest Packet Frame is 152 bits long, and that does not include any data, it is strictly Protocol. Now add to this one line of data, just one typewritten line, 80 bytes long. Now your Packet, Text and Protocol, is 792 bits long.

Now, it needs just ONE of these 792 bytes to be corrupted by QRM or QRN and the receiving TNC will reject the whole packet: Please re-send (ad infinitum).

At current HF Packet speeds of 300 Baud, this Packet takes 2.64 seconds to send. This means you absolutely require 2.64 seconds of no QSB, no QRN, no QRM, i.e. of complete quiet. Is there much of a chance for that on the HF bands, and particularly on 20 Meters? Just have a peak on 14,103, or even on the current favorite of the STA stations of 14,093.3 (14,095 on their LSB readout) or 21,097, and watch the game of eternal re-tries.

Compare this to AMTOR at 100 Baud, where a data block is three characters, 21 bits, and takes .210 seconds to send: 2/12th of the time of a Packet frame, and that will tell you why AMTOR is by far the more efficient data transfer mode at the current State of the Art.

That is the reason why AMTOR will steadily slug away at 100 baud and most of the time the effective Baud rate of data transfer will be close to 100%, whereas the efficiency of Packet on HF is a "misery" to behold.

In addition to all that, AMTOR is very spectrum efficient (if not overdriven on AFSK). It is a Narrow Mode and even recognized as such in the ill fated ARRL petition to allocate the upper 10 KC of our RTTY bands to Packet.

Packet, in contrary is a wide band mode, due to it's 300 Baud rate on HF, and consequently cannot live within the 250 Hertz that AMTOR can (and RTTY). They need more like 1000 Hertz at that Baud rate, and still they continue to re-try: oh yes, the Great Re-try Mode: HF Packet. A contest of inefficiency and poor use of spectrum.

If HF Packet were so hot, why is it not used to run traffic to and from the U.N. Forces in the Middle East, as Aplink does on Amtor almost error free and quickly?

Well, "Us Guys" fall for well done Commercials, and HF Packet is the result: it was never intended, nor is it suitable, for the crowded HF bands, but for the nice quiet VHF/UHF bands and an occasional Space Shuttle.

It is truly no wonder that the SSB Crowd in the Lower Portion of 20 M, in Europe and Latin America, want to move the HF Packet down, as it takes so much RF Spectrum, i.e. is so Broad, that it really causes bad interference with established SSB Communicators, who, as yet do not wish to know anything about Digital Modes: they want to leave that for their children.

I guess either the protocol should be improved to make it compatible with HF or the Racket should be stopped. In any event, the Digital Committee better come up with something good, that will be the basis for a consensus, before the next WARC conference.

CHIAO

Guess I better get off my bandwagon, as usual I am late with the Column, but I give our Dear Editor always the excuse that this is the only way to get "Up to Date" DX information and most of the time he falls for it. This time the Column is a little later than usual, as I did it originally on Sunday, but when I finished, I had a disk crash and could not recover the file, so today is Tuesday, 6 November, and I had to make some excuse to stay home and finish this, so the office is without my valuable (?) presence.

Many thanks to all of you who made this Column possible with your unique contributions, please keep them coming: THANKS, among others to VK2SG, W2JGR, OD5NG, YV5KAJ, F2JD/CE3, 9M2CR, K6IR, UZ9CWA, HK1LDG, OH2BH, UT5RP, JA1ACB and I5FLN. Without you, there could be no DX Column!

May the Lord, Our God, bless you all with good propagation and right timing, to catch that rare one you need in order to achieve your next higher level, and may the joy of DX be yours.

It may be a little early to wish you a Joyful Christmas and Prosperous and Happy 1991 (gosh, already?), but I know the vagaries of the mail and may not have a chance to do that in the December issue.

Best of 73, 88 where applicable, and may all your DX be new ones.
de **John, TG9VT** (not TG8VT as the printer put in October) on the Volcanos of Guatemala.

MSO'S

Dick Uhrmacher, K9VKH
212 W. 48th St.
Rapid City, KS 57702

Hi Gang! A very happy Thanksgiving Holiday season to each of you! I don't know where the time goes, but it seems that I no more than get my garden planted, than I'm thinking about Christmas! A sure sign of "old age" I guess!

1991 DAYTON HAMVENTION

For those of you that may be thinking of attending the 1991 Dayton HAMVENTION, it's certainly not too early to be thinking about hotel/motel reservations. The Radisson Inn Dayton was booked full in early October. And, this author

had to scramble pretty hard to find accommodations within the Dayton area complex. Dayton is always a good time, and of course the RTTY Dinner is the highlight for many of us. Get your reservations lined up, and we'll see you in April!

BASIC MSO OPERATING INFORMATION

I received a very nice letter from John Marthens, NU6A, from Whittier, California, asking that I provide some very basic MSO operating information in this column. And, I'm planning to do that very thing in the near future. I'm presently gathering information from each of the MSO SYSOP's on the National Autostart Frequency, (14 085 625 Hz), as to their operating hours, where they point their antennas, etc. If anyone, other SYSOP operating a MSO, computer based mailbox system, etc., would like to have their operating times, frequencies, etc., listed in the MSO Column, please don't hesitate to drop me a line and I'll gladly include the information.

The National Autostart Frequency has been in daily operation now for over 10 years on 20 Meters, and welcomes one and all to use the various systems operating there. The MSO's provide a means of keeping in contact with friends and acquaintances when "live" QSO's are not possible, by storing messages, and making them available for retrieval at a later time. Give it a shot.....you'll enjoy it!

K5FL MSO SYSTEM

W. L. "Brownie" Brown, K5FL, of Denton, Texas, has been a MSO Sysop on the National Autostart Frequency for many years. He runs a multi-mode digital system, and has provided quality MSO service over the years.

Brownie's main MSO system is the trusty HAL "MPT- 3100ASR" system, complete with DSK-3100 Disk System, and ST- 6000 Demodulator. As the photo #1 shows, Brownie utilizes a Kenwood TS-940S/AT transceiver, coupled to a beam antenna, through a Millen transmatch, for his RTTY contacts. His HAL MSO contains such goodies as the current DX information, ARRL RTTY Bulletins, remote user files, etc. His MSO is open for all to use, and operates seven days a week.

The second photo shows Brownie's CW, AMTOR, APLINK, and RTTY systems. In this system, he uses the HAL PCI-3000 "PC- AMTOR" card in his computer, to operate on some of the new modes. Although not presently acting as a SYSOP in the APLINK system, he does check into the various APLINK systems quite frequently, and operates a little CW as well. He utilizes a Kenwood TS-440S/AT for this setup, at approximately 100 watts output.

Photo #1 - K5FL MSO equipment

Photo #2 - K5FL CW, AMTOR, APlink, and RTTY station equipment

Brownie is an Extra Class ham, 80 years young, and getting younger every day! He retired after 31 years working for AT & T, and now thinks that "retirement" is the best job he ever had. He worked in missiles, radar, sonar and communications with AT & T, has had various Amateur Radio callsigns, and was the first American to hold a VP7 callsign in the Bahamas. Brownie has worked over 256 countries, and has 191 confirmed. He and his wife Joy enjoy travelling, particularly in the mountains of Colorado and Wyoming, and also seeing their son in Germany, where he is employed as Directory of Broadcasting for Radio Free Europe.

Drop in on Brownie's MSO and meet him. You'll enjoy the experience and meet a fine gentleman!

UPDATE ON GAYLORD, WB8ICL:

Gaylord Crawley, WB8ICL, long-time MSO Sysop on the National Autostart Frequency, continues his battle with cancer. Evidently, just recently, he has had some setbacks, and as I'm writing this column, is hospitalized. We can all make Gaylord's days a bit brighter by dropping him a card or letter in the mail. His address is: Gaylord Crawley, WB8ICL, 1688 Clifton Road, Yellow Springs, OH, 45387.

F.C.C. REGULATIONS STILL REQUIRE STATION IDENTIFICATION

For whatever reason, I still see some folks utilizing the MSO's that fail properly to identify their transmissions. Not only does simply typing DE W9XYZ at the start of your RTTY transmissions comply with the FCC's requirements for identification, but it also has an added benefit. Even with the modern day sophisticated demodulators we use on RTTY, they all seem to require a few characters of valid RTTY data, or at least a carriage return/line feed, before they begin to copy properly. So why not kill two birds with one stone? Start off by sending DE W9XYZ, followed by two carriage returns/line feeds, (that's usually pressing the "ENTER" or "RETURN" key on your computer keyboard), and then the command you want the MSO to execute. The FCC will love it, and you'll note that the MSO responds much more favorably to your commands.

That's it for this month. I hope that each of you has a very happy Holiday season, filled with good cheer and numerous RTTY QSO's! Keep those letters and cards coming! —73—

de **Dick, K0VKH** ■

HENRY RADIO IS THE PLACE
...THE BEST PLACE
to fill all your data communications needs

The TEMPO MPP1

a unique new mobile data printer, includes a packet controller and a 13.6 VDC printer that interfaces with any mobile radio. In a recent user test it proved to have about twice as much audio level range to erance as other TNCs. It is also an ideal unit for emergency work and a commercial version is perfect for dispatching service, emergency and police vehicles

HAL Communications' ST-7000

HF Packet Modem — a high performance modem des gned specifically for 300 baud HF Packet. It offers no-compromise performance to assure optimum operat on under the most demand ng s gnal condit ons. Tech niques deve oped for government and mi itary use are used in the ST 7000. AGC-controlled AM signal processing provides a w de dynamic range. A i f ters and detectors are optimized for 300 baud HF Packet. It offers the 200 Hz shift mode and a w der 600 Hz shift mode, each supported by separate 6 pole input filters and a 40 db AGC system

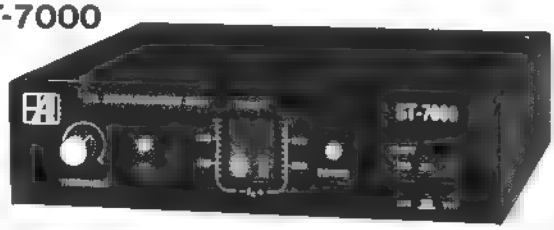

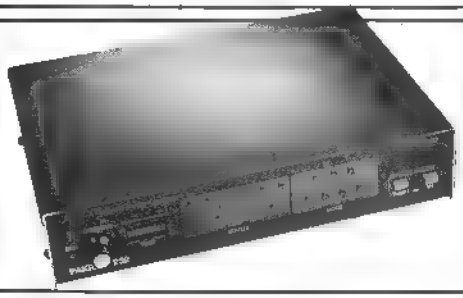

The PK-232 by AEA

the only controller offering Morse Code, Baudot, ASCII, AMTOR, Packet, and facsimile Transm ssion & Reception plus the ability to monitor the new Navtex marine weather and navigational system — 7 modes in one controller. The PK-232 makes any RS-232 compatible computer or terminal the complete amateur digita operating position. All decoding, s.gnal processing and protoco. software is on ROM. Only a simp e terminal program (ike those used with telephone modems) is required to interface the PK-232 with your computer. **Watch for the new and exciting AEA FSTV-430. Have fun on amateur TV!**

Obviously, we can fill in a system that you have already started. Or we can furnish a complete system to fit your needs and budget. For example, here's some suggestions for the amateur just entering the exciting field of data communications, or for the amateur who wants the best available

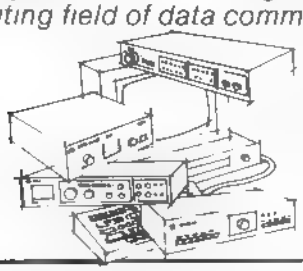

NO. 1 For the fun (and very affordable) mode VHF Packet, AEA PK-88 with personal mailbox, 8K programmable memory and TCP-1 P compatability
For serious 20 M world-w de DXing on Packet, 200 or 600 Hz shift — add the superb HAL ST-7000

NO. 2. . .top of the line! The HAL ST-8000 or HAL ST-6000 and AEA's PK-232 — the winning combination. You can't do better for all-mode, all-band enjoyment of hi speed data communications

If you have any questions concerning these units, or would like to discuss your requirements with a knowledgeable specialist, please call or ask for Fred Daukantas, N6SFD. We also carry a large selection of excellent commercial products for data communications and emergency systems as well as a complete inventory of amateur equipment and linear power amplifiers.

HENRY RADIO 61 YEARS OF SERVICE

Henry Radio

2050 S. BUNDY DR • LOS ANGELES, CA 90025 • (213) 820-1234
Toll free order number: (800) 877-7979 TELEX. 67-3625(Henradio) FAX (213) 826-7790

CONNECTIONS

Cole Ellsworth, W6OXP
10461 Dewey St.
Garden Grove, CA 92640

Hello gang. Turkey month again! Better get going and work hard to keep this column from being a Turkey.

WE HAVE MAIL

Dave Carrick, K8MAM, has some questions he would like answered. He is getting back into digital modes after a multi-year hiatus and is considering getting a multi-mode controller He would like to see an "unbiased" evaluation of the big three, PK-232, KAM, and MFJ 1278 Now is the chance for you readers to provide a comparison shoppers guide to multi-mode controllers. Anyone out there want to do an article in this regard? Your prose does not have to be perfect, just get it down on paper and send it to Dale or me. We will do the rest and you will get full credit.

Dave is also looking for a "bug free and functional" RTTY program for an IBM AT compatible computer. So far every program he has tried has been full of bugs, so he is looking for something that works. He specifically says "a program to translate Baudot RTTY to ASCII, NOT an interface program to operate with the multimode controllers." Hmmm, if Dave did get a multi-mode controller, then he would not need the program, since any of the controllers translate incoming baudot to ASCII.

MORE MAIL

Dale received a note from a RTTY Journal subscriber who said he would like to see some articles dealing with reception of commercial RTTY modes. Are any of our readers doing much SWL work on the digital modes? There is SITOR weather and ship traffic, NAVTEX on the US East Coast and Southeast, Hi Speed CW, RTTY press stations (mostly in Spanish, I would guess), Cyrillic Alphabet stations of which many are Russian Ships, and the like. Articles dealing with any aspect of this would be most welcome. Perhaps someone would like to do a column in this area? I would be willing to donate my space for such a column - Burn Out has hit me too, although I have been at it for only three years, a mere piker compared to such old timer columnists like Dick K0VKH. Speaking of NAVTEX, I am still waiting for the Long Beach, California NAVTEX station to get on the air and it has been two years since they were "supposed" to come up.

SCAN CIRCUITS

Actually this is really "more mail" as the following circuits were sent to me by John ,TG9VT. John got them from Jim, KE5HE, who designed the scan circuits. John has one of these units working on his ICOM IC-761 and says it does a really beautiful job. His scanner is activated by the PTT and "start scan" is accomplished by a reed relay across the "Scan Switch" in the transceiver. After a link drops, there is a ten second delay before Scan resumes, to permit relinking (on AMTOR).

Two different circuits are shown. Circuit #1 is for radios that require momentary contact closure to start scan and will stop scan upon PTT grounding. Circuit #2 starts and stops scan on momentary closure of the PTT switch and provides the delay for relinking.

Note that Circuit #1 has three illustrations, the schematic, the 1-to-1 PCB artwork, and the component layout/reference artwork. Circuit #2 also has a set of three illustrations but as you can see, Circuit #2 is more complex. The following is the instructions sheet that accompanied the artwork.

INSTRUCTIONS FOR KE5HE SCAN CIRCUIT

This circuit may be used to start/stop scan on radio which:

a. Stop scan with PTT action and need a momentary switch closure to restart scan (IC-761,781,751,735, TS- 440, 140)
b. Need a momentary switch closure to stop scan and a momentary closure to restart scan. (TS-940, actuate the "Hold" button)
c. Need a switch closure to start scan and an opening of that switch to stop scan (TS-930)

In addition, circuitry is provided to give a single, delayed switch closure after power up to start the scan function on some radios. On the radios in part a., above, this closure is used to actuate the PTT, that will automatically start the scan after a short delay. On the TS-940, this switch closure may be used to actuate the "Memory Scan" button.

NOTES:

1. Connect a jumper between J1 and J2. D3 and D4 are connected on the foil side of the board

2. RY1 and D3 may be mounted inside the rig, in which case only one line (and ground) need come from the rig to the scan circuit

3. For use on radios in part a. above, C8, C9, C10, R9, R10, R11, D5, Q3, and IC3 are not used. You may put them on the board, but don't plug in IC3. In addition, connect a jumper from M2 to the nearby G and connect a jumper from M1 to P2. Connect 12V, GND, PTT goes to P1, and the SCAN Switch to S1 and S2. It is convenient to install a switch on the 12V line to turn the scan off. The board may be installed in a small plastic box fitted with a 5-pin DIN plug. Shield all external wiring between rig, scan circuit, and controller.

4. For use on the TS-940, the circuit may be installed inside.

5. For the TS-930, the components listed in part 3 above are not needed. In addition, C2, C4, C5, R4, R5, R6, D6, and IC2 are not used Connect Pin 3 of IC1 to R7.

If you have questions, Jim KE5HE's address is as follows: Mr James Jennings KE5HE, Rt. 2, Box 165-E, Hearne, TX 77859

Thank you, Jim, for your efforts, and thank you, John, for taking the time to send the information to me for the Connections column!

That is all for this month. Have a nice Holiday.

de Cole, W6OXP ■

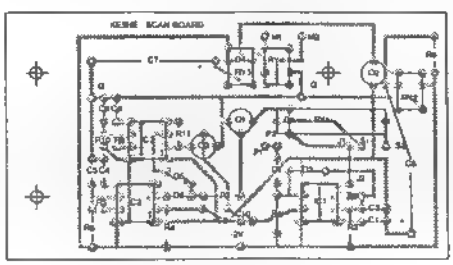

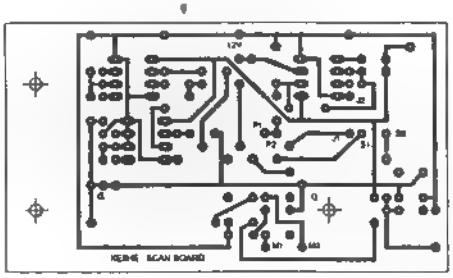

Circuit # 1-B

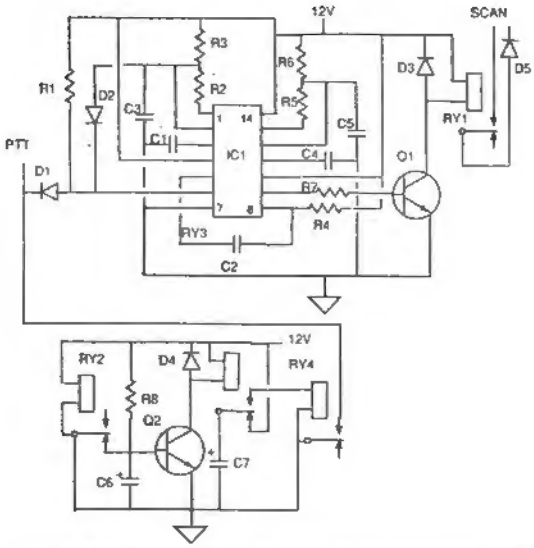

SCAN CIRCUIT FOR RADIOS WHICH REQUIRE MOMENTARY CONTACT CLOSURE TO START SCAN AND WILL STOP SCAN UPON PTT GROUNDING. ALSO INCLUDED IS CIRCUITRY WHICH WILL REINITIALIZE THE PROCESS UPON POWER-UP AFTER POWER FAILURE. JIM KESHE, 4/8/1990

R1,R4 - 12K
R2,R5 - 190
R3 - 4.7M
R6 - 430K
R7 - 1K
R8 - 56K
C1,C2,C4 - 0.1MF
C3 - 2.2 MF tantalum
C5 - 1 MF tantalum
C6, C7 - 470 MF electrolytic
D1, D2, D3, D4, D5 - 1N914 (note: observe polarity on diodes (D3 replaces one in RC, may not be needed))
IC1 - NE555
RY1,RY2,RY3,RY4 - 12V SPDT
Q1,Q2 - 2N2222

Circuit # 1-A

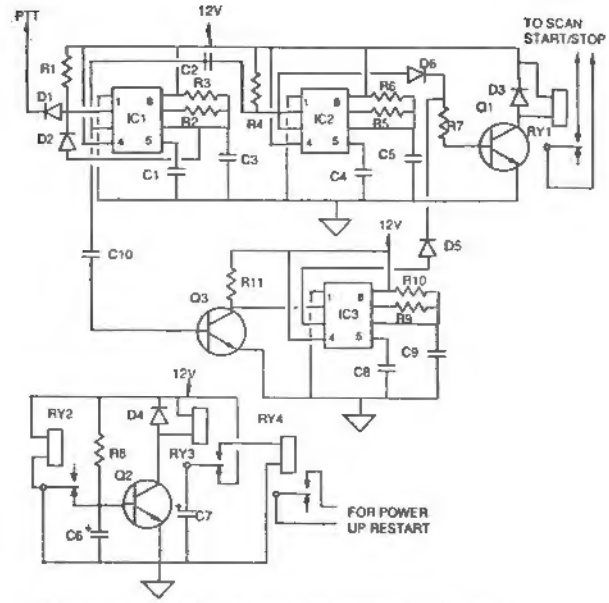

SCAN CIRCUIT WHICH PROVIDES MOMENTARY CONTACT CLOSURES TO START AND STOP SCAN. ALSO INCLUDED IS CIRCUITRY WHICH WILL REINTIALIZE THE PROCESS UPON POWER-UP AFTER POWER FAILURE BY CLOSING A SEPARATE CONTACT. JIM KESHE, 4/21/1990

R1,R4 - 12K R2,R5,R9 - 190 R3 - 4.7M R6,R10 - 430K
R7 - 1K R8 - 56K R11 - 4.3K
C1,C2,C4,C8,C10 - 0.1MF
C3 - 2.2 MF tantalum
C5,C9 - 1 MF tantalum
C6, C7 - 470 MF electrolytic
D1,D2,D3,D4,D5,D6 - 1N914
IC1,IC2,IC3 - NE555
RY1,RY4 - 12V SPST
Q1,Q2,Q3 - 2N2222
RY2,RY3 - 12V SPDT

Circuit # 2-A

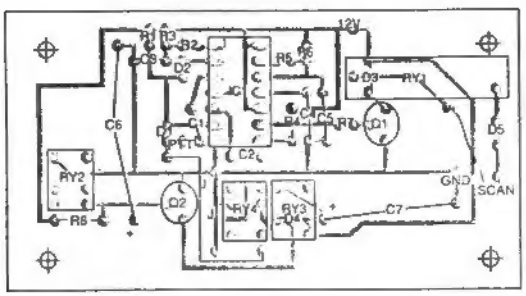

D3, D4 mounted on foil side
J - jumper

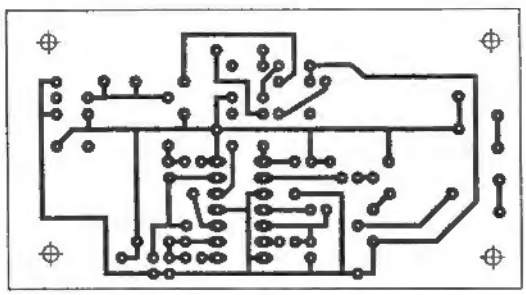

Circuit # 1-C

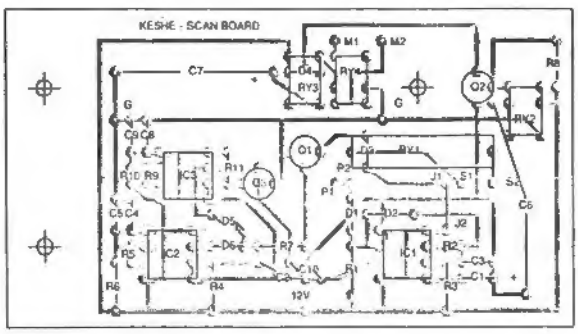

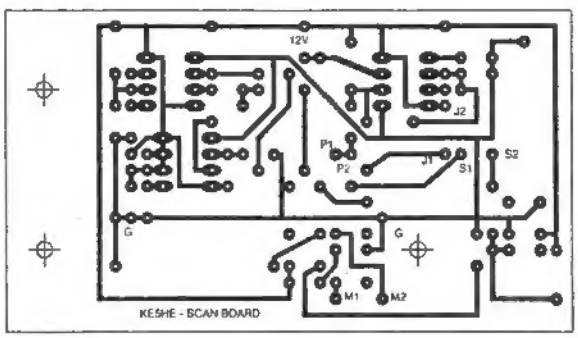

Circuit # 2-B

Circuit # 2-C on page 23

DX COMINGS by John Troost, TG9VT

The best news is that **MALYI VYSOTSKIJ ISLAND, 4J**, will be activated by OH2BH, Martti, and a USSR Group. This time definitely with RTTY and the RTTY operator is scheduled(tentatively) to be Jules, W2JGR. The license is in hand and the anticipated time frame looks like April or May of 1991.

The worst news is that the long-planned expeditions to **SOUTH SANDWICH** and **SOUTH GEORGIA ISLANDS, VP8SSI** and **VP8SGI** have been postponed (not cancelled). The reason for this is the increasing cost of fuel, due to the Middle East Crisis, which added some $40,000 to the charter vessel's cost, which the Expedition could not bear. All gear and other expenses were taken care of, but the increased fuel price could not be covered.

Romeo, **3W3RR**, will return to **SPRATLY** in December '90 on All Modes, providing he can obtain **SUPPORT** for his transportation expenses, totalling about $5000. If you wish to contribute, please send your check to: Ed Kritsky, Box 300715, Brooklyn, NY 11230. Enclose an SASE so your check may be returned, in case the expedition is cancelled.

By the time you read this, the **CE0ZZ, JUAN FERNANDEZ ISLAND**, expedition should be successfully completed: hope all of you have it in your RTTY log.

At this writing OH2BH, Martti Laine, informs that following the CQ WW CW Contest, he and his group plan to activate PENGUIN ISLANDS, ZS9Z/ZS1, from about November 27 for a 6 day stint. RTTY is planned as one of the Modes to be used.

Also, by the time this Issue reaches you, the Big Expedition from T33T, **OCEAN ISLAND**, also know as **BANABA**, will be finished. This is a multinational group, scheduled to be active from about 6 October, for at last 2 weeks. Look for Kioko, ex ZK3KY and her beautiful RTTY signal.

ST4/WZ6C, Eric, finished his tour in **SUDAN**, without ever being able to obtain a license to permit him to use his PK232 on any digital mode. Poor Eric, Poor PK232. Eric appreciates your understanding.

7Z1AB is the new Station active from **SAUDI ARABIA**. This station is located in the U.S. Embassy Compound in Riyadh but due to heavy work load, operating times are limited. An ICOM 765 is being prepared for RTTY. HZ1AB, in a military compound, is temporarily QRT for obvious reasons.

The licensing process in **THAILAND**, especially for RTTY, is still a big question mark. That is the reason why you have not heard the PK232 supplied by the International **RTTY DX Association (IRDXA)** on the air from HS1AC, the Science Museum. In that respect, a little prayer once in a while can do wonders.

3B9FR, RODRIGUEZ ISLAND, made a few RTTY contacts, but has not been seen on any Mode ever since. He used the gear supplied by the IRDXA. If you find him in any Mode, please tell him that the Digital World is hungry for him.

P29BT, PAPUA NEW GUINEA, has his **IRDXA** gear and should be up any time in November.

7Q7LA, MALAWI, will be on the air on RTTY as soon as **IRDXA** has sufficient funds to ship the equipment, which is ready for him. As things stand right now, some contributions have come in during the last month, to pay outstanding debts, but there is no cash to handle ongoing projects like 7Q7LA and other goodies still in the closet, including possible RTTY gear for a **SOUTH GEORGIA** Station. **CONTRIBUTIONS**, in Equipment or Cash are urgently required: please mail to IRDXA, 356 Hillcrest Street, El Segundo, CA 90245, U.S.A. (Yes, U.S.A. not Mexico, in spite of the city name.) Or call to discuss the gear you would like to contribute, which sits in a corner anyway: (2130 322-7112. Even a FAX will do to (231) 322-714. But **HELP PLEASE.**

BANGLADESH gives us two opportunities. Jim Smith, VK9NS is planning a visit there shortly to try and get the permits. From Jim's record, few Governments have turned him down, so the chances on that one are good. Jim always carries RTTY gear. Then Vince Thompson, K5VT, who activated D68VT in October (or at least so I am told), plans to return to S2VT late February 91 with **IRDXA** gear under his arm. There is a lot of crossing of toes to be done there.

And then we have **RUMOR DEPARTMENT**. For it to be a "rumor," to me, it has to be at least 50% true.

I have not heard from VU2JX recently, but there are strong rumors that he and a group of Indian operators will soon activate **A51JX, BHUTAN**.

The **ANGOLA** on **RTTY** rumor persists. It now reads that well known European DXer will activate **D2** on RTTY very soon. Smells like Henry, DJ6JC. He would do such a thing without advance notice, but that is just a guess.

Then rumors persist that **XU, CAMBODIA**, will soon be active on RTTY. Would not be surprised, there has been lots of SSB activity from there, both by Locals and by JA groups: time a RTTY signal appeared from there.

GL de **JOHN, TG9VT**

CLASSIFIED AD DEPARTMENT

First 30 words $7.50, additional words 10 cents each. Cash with ad. Deadline for ads is 1st of month of publication. (Example - Ad arrives by 1st of September will be run in the September issue)

HENRY RADIO – Your Data Communications Place is overstocked with used equipment. We have HAL DS3100's, MPT/MSO's, Demodulators, and the latest NEW items in stock, (ST-8000, DS-3200, ST-7000, etc). Complete line of Advanced Electronics Applications (AEA), used CP-100 and NEW and used ATU-1000, as well as the PK-232 ALL MODE CONTROLLER. Call Henry Radio at (213) 820-1234 in Los Angeles or (800) 877-7979 outside California. Ask for Fred, N6SFD.

PRINT SOVIET MARITIME RTTY TRAFFIC IN CYRILLIC: Use your IBM PC -compatible computer and multimode demodulator to obtain a CYRILLIC hard copy of third-shift Cyrillic transmissions with RTTY LAT-2-CYR software. Versions available for AEA PH-232, Universal M-7000, and Kantronics KAM. Works with a variety of printers including most Epson and IBM 9-pin and 24-pin printers. Cost is $29.95, but please send a business-size SASE for detailed system requirements and copy of sample output to Stewart Morgan, P.O. BOX 37595, Raleigh, NC 27627- 7595. Please specify the demodulator types in which you are interested, and include a separate envelope for each demodulator type.

NEWS – NEWS – NEWS – NEWS Amateur Radio's Newspaper "WORLDRADIO." One year subscription is $12.00. Contact: WORLDRADIO, P.O. BOX 189490, Sacremento, CA 95818

CQ Magazine (now including Ham Radio) – The Ham's magazine. All year long CQ brings you the best writers, the best reading in Amateur Radio. Written and edited to be enjoyed as much as you enjoy, Ham Radio itself. Subscribe now and see for yourself. One year $22.95 U.S., $25 Canada/Mexico, $27 Foreign. Contact CQ Communications, Inc., (also publishers of Popular communications, Modern Electronics and Electronic Servicing & Technology), 76 North Broadway, Hicksville, NY 11801, Phone 516-681-2926

DIALTA AMATEUR RADIO SUPPLY Specializing in Digital equipment for over 12 years. Authorized dealer for "HAL Communications Equipment." We also buy and sell used Digital equipment. Call Dick, K0VKH, at (605) 343-6127, or drop us a line at 212 S. 48th St, Rapid City, SD 57702

RS-232C and COM PORT booklet: This is a compilation of all articles published in past issues of the RTTY Journal on these two very important topics. If you are using a computer in conjunction with Ham Radio, you will find this booklet an invaluable tool to have in your shack. The booklet contains information about COM ports 1,2,3 and 4 as well as the RS-232C information. You would need to reference many publications in order to obtain the same information contained in this booklet. Why do that? Send $5.00 to the RTTY Journal and you will receive a copy of this invaluable booklet by return mail, post paid.

FOR SALE: ASR-33 and Xitec UDT170 terminal, $125.00. ATWATER- KENT 44 radio and S-C cone speaker, $125.00. Casio FX7000G graphic calculator, $35.00. 1KW low pass filter, $5.00 – Call (805) 985-9941

WANTED: Back issues of RTTY JOURNAL, RTTY (Florida), ARTS (New York) and other teletype publications and a gasoline or diesel generator (50 to 100 watt). Orville Magoon, K6DZN, Guenoc Winery, P.O. BOX 398, Middletown, CA 95461

FOR SALE: ETO ALPHA 78. Three 8874 finals in parallel, still tunes up sharp. Runs full KW out with 60 watts drive. Both semi-automatic and manual tuneup. Exterior in good condition. Perfect Amp for RTTY service. The ads with the brick on the key are true! Asking $2000.00 – Call Chris, N8AI, with offer at (805) 835-7061 (home) or (805) 326-5406 (work), Bakersfield, CA.

JUST RELEASED: RTTY Journal INDEX for years 1984 thru 1989. If you are tired of looking through back indexes or issues for an article you wish to reread, then you will want to have this new INDEX in your shack. Order today, by sending $2.00 to the RTTY Journal and we will rush your copy to you. The Index also contains a handy order form for ordering back issues that are available.

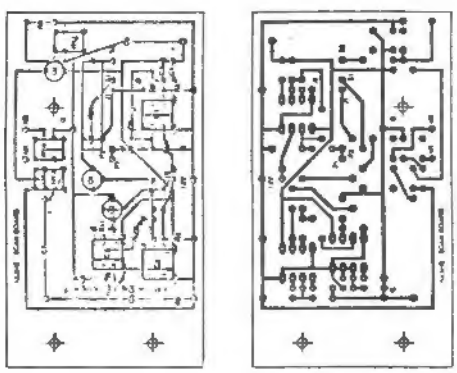

Circuit # 2-C

GENERAL PRINTING
LAY - OUT
QSL CARDS
GRAPHIC ARTS
PASTE UP
FOR THE DX'ER BY A DX'ER
WA6AHF
MEMBER
NO. CALIF. DX CLUB
Hughes SERVICES UNLIMITED
17494 VIA ALAMITOS
SAN LORENZO, CALIF. 94580
(415) 276-3573
WRITE FOR SAMPLES
Please mention you saw this Ad in the RTTY Journal.

MPC-1000R BY DOVETRON

MULTIPATH CORRECTION, IN-BAND DIVERSITY, SIGNAL REGENERATION, UP-DOWN SPEED CONVERSION, 200 CHARACTER FIFO MEMORY, KEYBOARD-CONTROLLED WORD CORRECTION & DIGITAL AUTOSTART

THE MPC-1000R REGENERATIVE RTTY TERMINAL UNIT

The DOVETRON MPC-1000R is a complete Transmit-Receive modem designed for optimum radio teleprinter communications on land, sea and in the air.

Standard features include a high level loop supply and keyer (neutral or polar), EIA and MIL FSK outputs, a phase-continuous AFSK Tone Keyer with three selectable Mark - Space - Shift tone pairs, Mark, FSK & Digital Autostart, Automatic Markhold, an internal RY Generator for terminal unit Self-Test and circuit adjustment, and a Signal Loss Alarm circuit.

The MPC Series is available in six different models to meet your exact requirements.

Complete specifications are available on your request, or call 602-281-1681

DOVETRON

3034 Tucson-Nogales Hwy.
Nogales, AZ. 85628-6160

RTTY JOURNAL
9085 La Casita Ave.
Fountain Valley, CA 92708

SECOND CLASS
POSTAGE PAID
SANTA ANA, CA
92799-9998